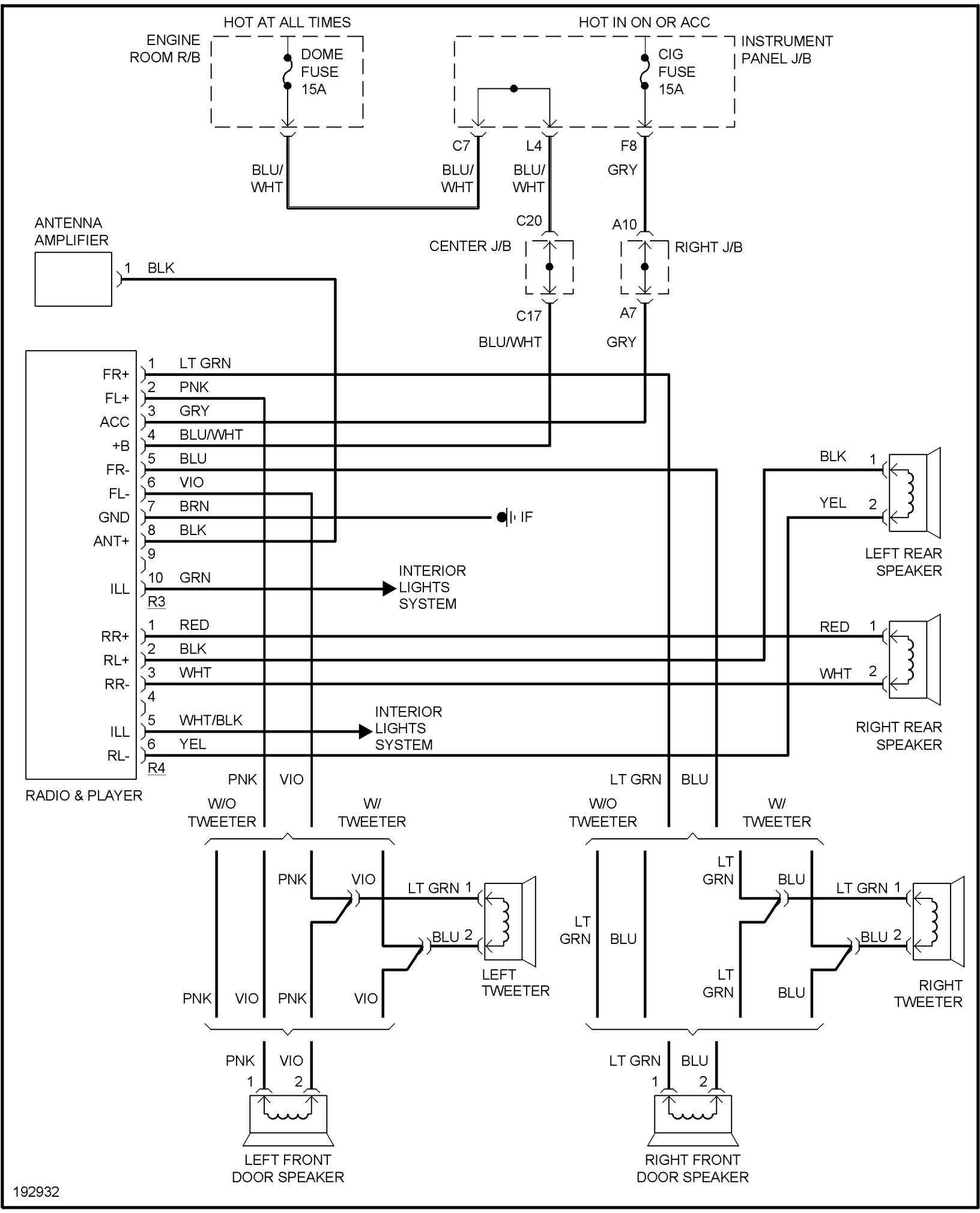
HOT AT ALL TIMES
ENGINE ROOM R/B
DOME FUSE 15A
HOT IN ON OR ACC
INSTRUMENT PANEL J/B
CIG FUSE 15A
C7
L4
F8
BLU/WHT
BLU/WHT
BLU/WHT
GRY
ANTENNA AMPLIFIER
1 BLK
C20
A10
CENTER J/B
RIGHT J/B
C17
A7
BLU/WHT
GRY
FR+ 1 LT GRN
FL+ 2 PNK
ACC 3 GRY
+B 4 BLU/WHT
FR- 5 BLU
FL- 6 VIO
GND 7 BRN
ANT+ 8 BLK
9
ILL 10 GRN
R3
IF
INTERIOR LIGHTS SYSTEM
RR+ 1 RED
RL+ 2 BLK
RR- 3 WHT
4
ILL 5 WHT/BLK
RL- 6 YEL
R4
INTERIOR LIGHTS SYSTEM
RADIO & PLAYER
BLK 1
YEL 2
LEFT REAR SPEAKER
RED 1
WHT 2
RIGHT REAR SPEAKER
PNK VIO
LT GRN BLU
W/O TWEETER
W/ TWEETER
W/O TWEETER
W/ TWEETER
PNK VIO
LT GRN 1
BLU 2
LEFT TWEETER
PNK VIO PNK VIO
LT GRN
BLU
LT GRN 1
BLU 2
RIGHT TWEETER
LT GRN BLU
PNK VIO
1 2
LEFT FRONT DOOR SPEAKER
LT GRN BLU
1 2
RIGHT FRONT DOOR SPEAKER
192932